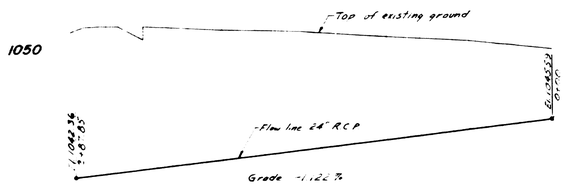

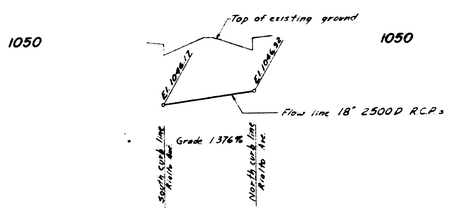

B.M. Screw in E curb return, Rialto Ave & "K" St
El. 1052.17

SCALE: 1" = 40'

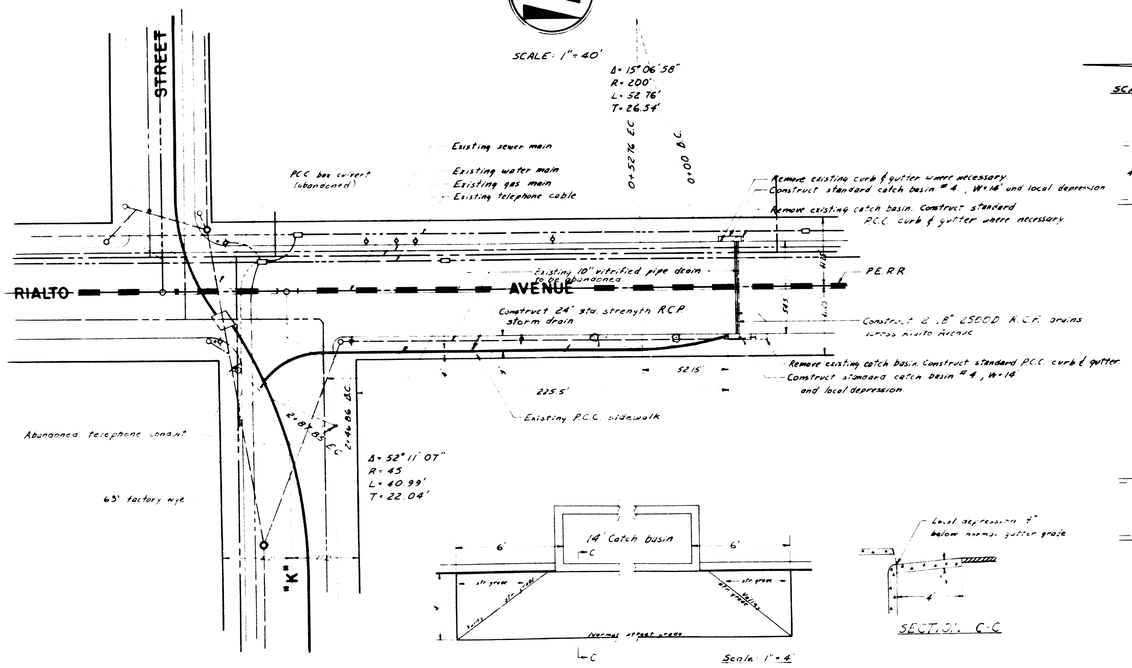

DETAIL - LOCAL DEPRESSION

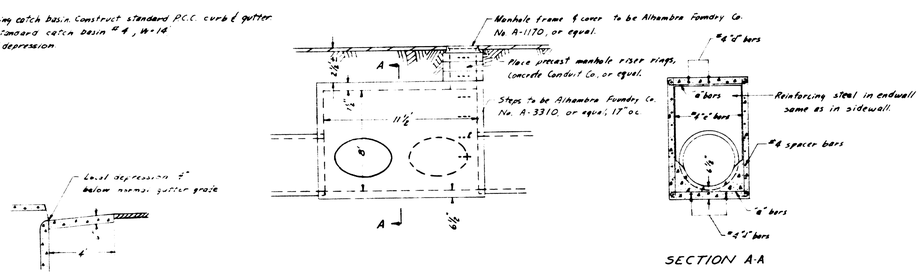

JUNCTION BOX No. 2

REINFORCING STEEL

"a" bars		Size Bar #	5
		Spacing	6
		Length	6-9
"f" Dist. bars	No.	Top slab	5
		Bottom slab	6
"e" bars		Spacing	18
Spacers		Spacing	12

Extra reinforcing steel to be placed around all openings shall consist of 2 #5 ϕ bars

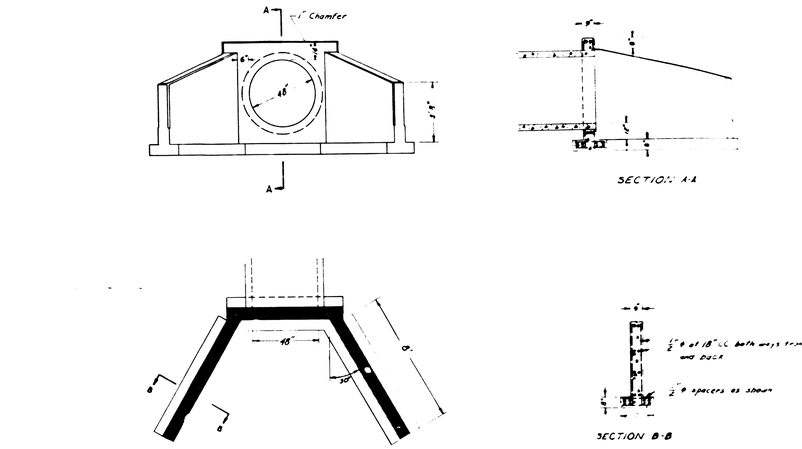

DETAIL - END WALL

SCALE: 1" = 4'

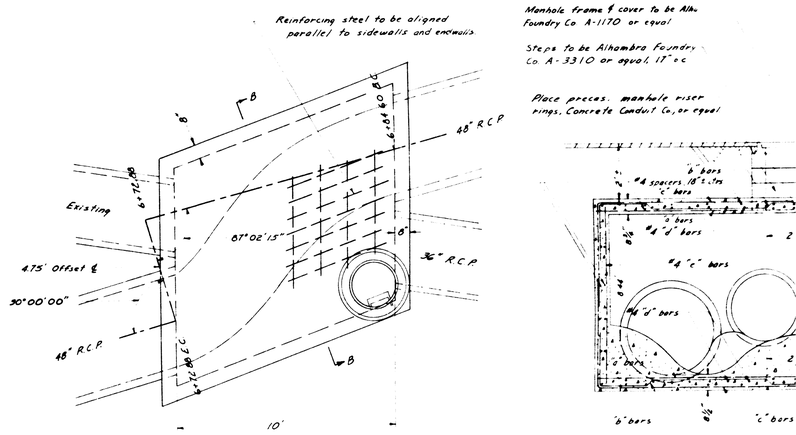

SCALE: 1" = 3'

REINFORCING STEEL

"a"		Size Bar #	6
		Spacing	15
		Length	10-10
"b"		Size Bar #	6
		Spacing	15
		Length	16-1
"c"		Size Bar #	6
		Spacing	15
		Length	20-0
"d" Dist. bars	No.	Top Slab	8
		Bottom Slab	7
"e" bars		Spacing	18
Spacers		Spacing	18

"e" bars & spacers to be placed spacing same as in sidewalls.

Extra reinforcing steel to be placed around all openings shall consist of

JUNCTION BOX NO. 1

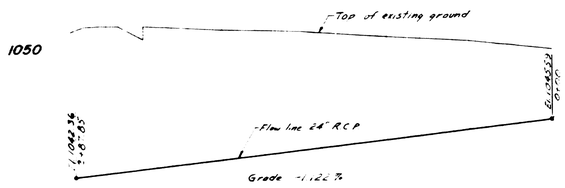

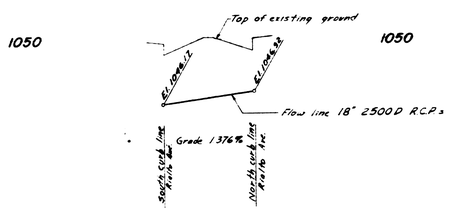

B.M. Screw in E curb return, Rialto Ave & "K" St
El. 1052.17

SCALE: 1" = 40'

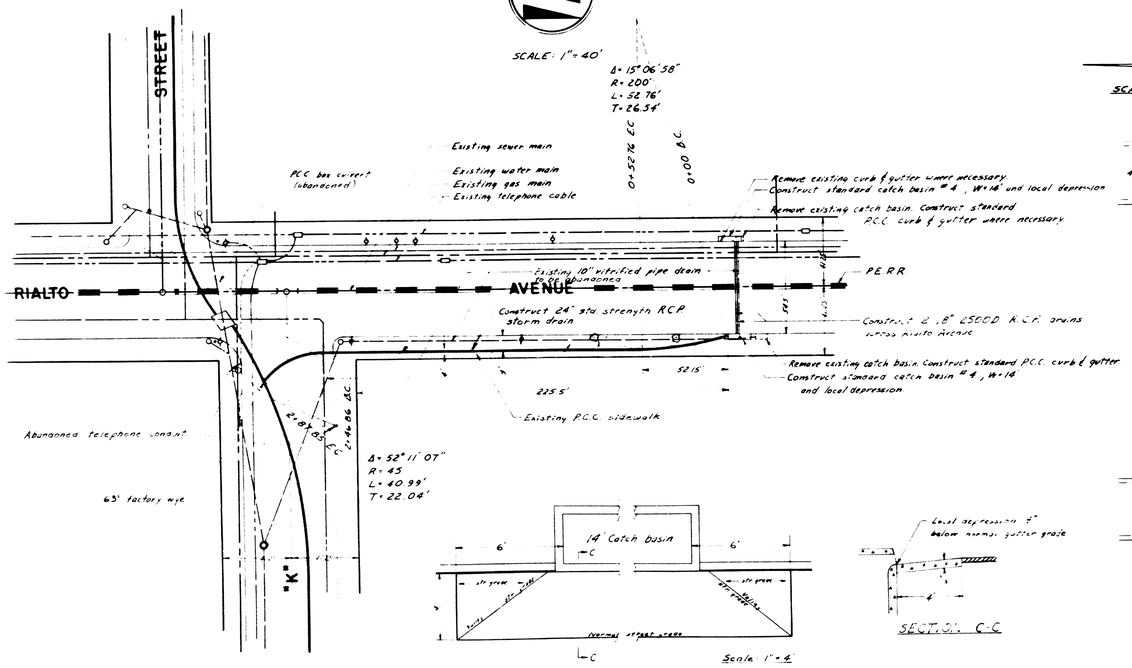

DETAIL - LOCAL DEPRESSION

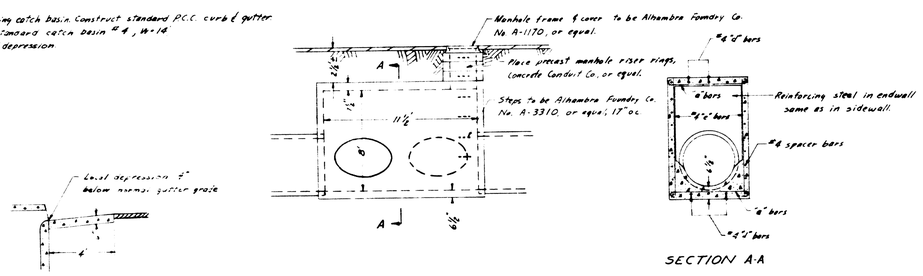

JUNCTION BOX No. 2

REINFORCING STEEL

"a" bars		Size Bar #	5
		Spacing	6
		Length	6-9
"f" Dist. bars	No.	Top slab	5
		Bottom slab	6
"e" bars		Spacing	18
Spacers		Spacing	12

Extra reinforcing steel to be placed around all openings shall consist of 2 #5 ϕ bars

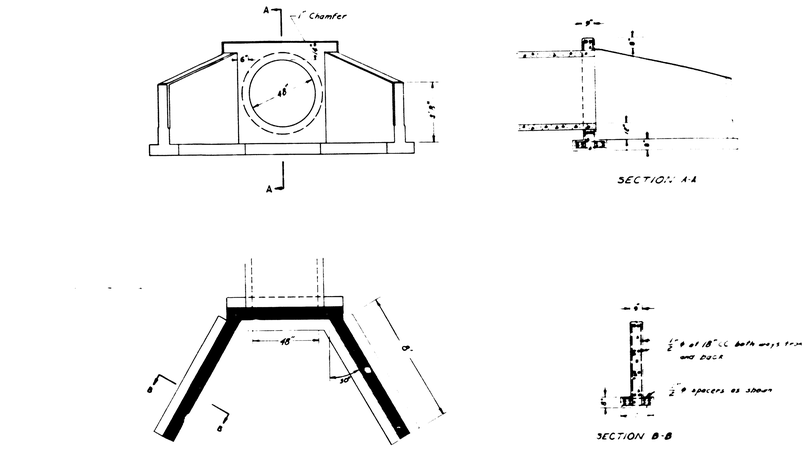

DETAIL - END WALL

SCALE: 1" = 4'

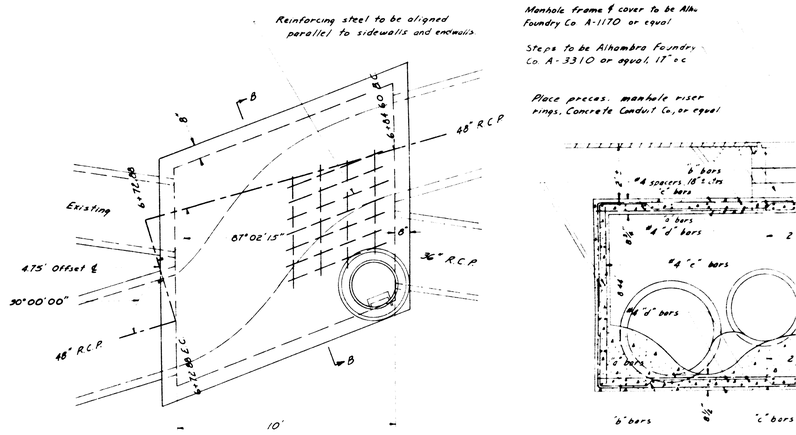

SCALE: 1" = 3'

REINFORCING STEEL

"a"		Size Bar #	6
		Spacing	15
		Length	10-10
"b"		Size Bar #	6
		Spacing	15
		Length	16-1
"c"		Size Bar #	6
		Spacing	15
		Length	20-0
"d" Dist. bars	No.	Top Slab	8
		Bottom Slab	7
"e" bars		Spacing	18
Spacers		Spacing	18

"e" bars & spacers to be placed spacing same as in sidewalls.

Extra reinforcing steel to be placed around all openings shall consist of

JUNCTION BOX NO. 1